ZOOMLION

TRUCK MOUNTED CONCRETE PUMP

EU-A 40X-5RZ

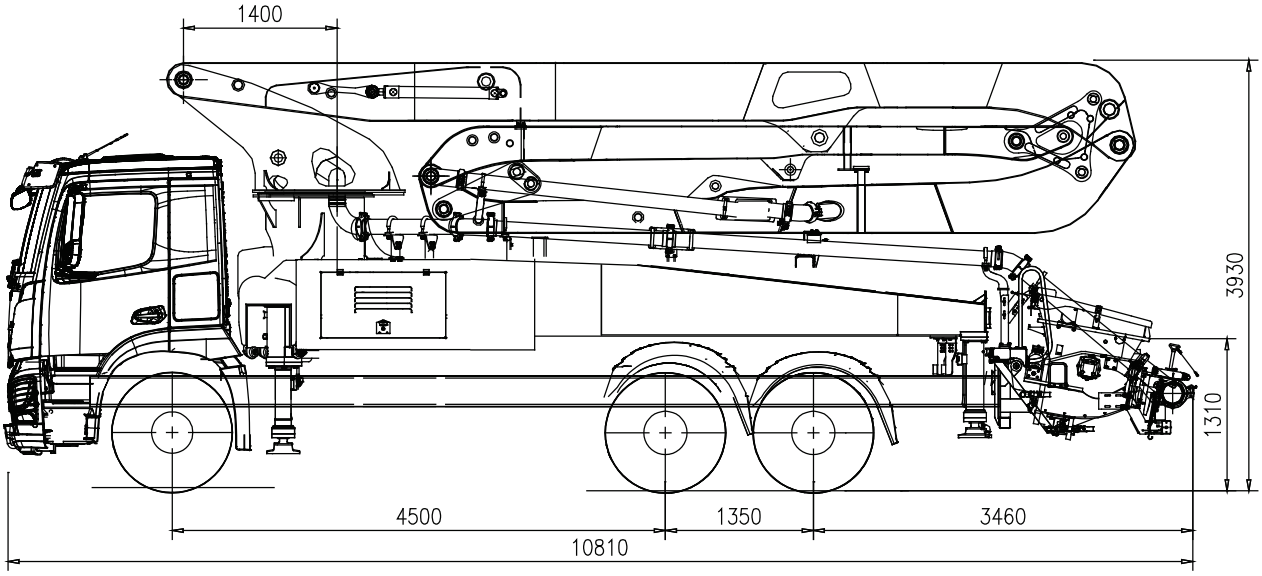

Note: Standard version. Dimensions and weights depend on truck, pump model and equipment.
Dimensions in mm. Example based on Mercedes- Benz Arocs 5 2643.
For illustration only. Actual products may vary.

Technical Specifications

BOOM	UNIT	
Reach height	m	39.10
Horizontal reach (gross/net)	m	33.70/30.70
Reach depth	m	26.40
Unfolding height	m	9.10
Sections	/	5
Folding system	/	RZ
End hose length	m	3
Delivery line	mm	DN 125
PUMP		
Max. output	m^3/h	184
Max. pressure	mm	83
Delivery cylinder	mm	Φ260
Stroke	mm	2100

*All data are maximum theoretical values.

Reach information diagram, support

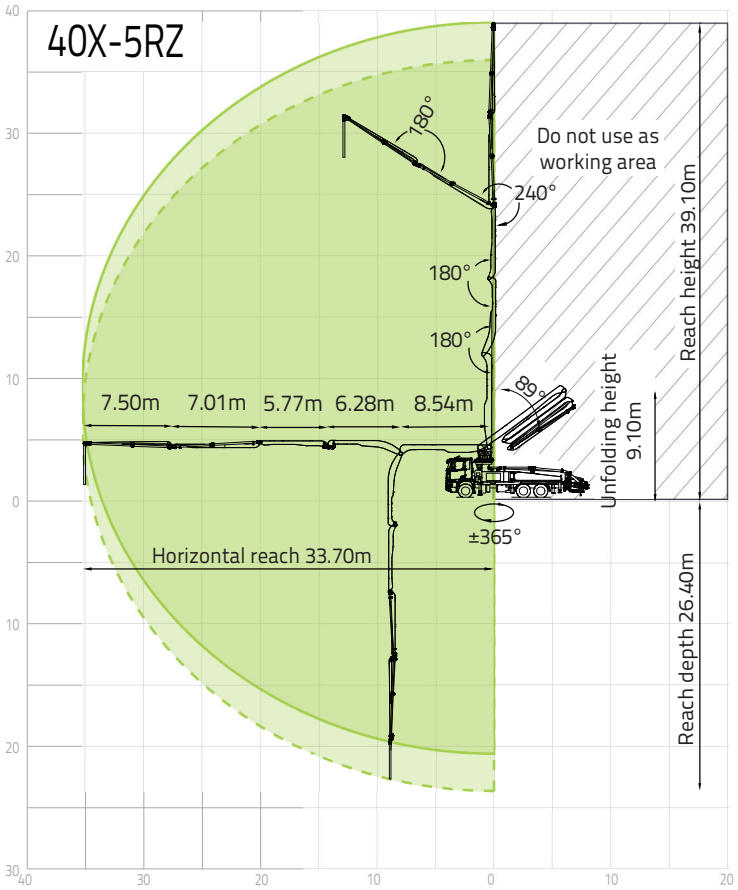

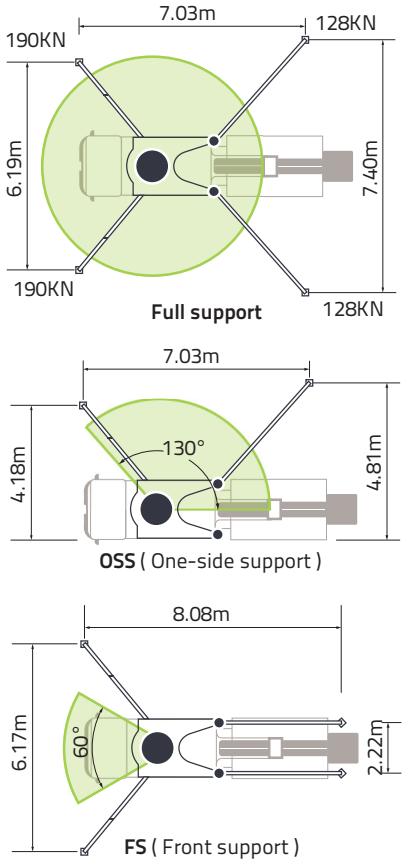

Configurations (Optional★)

Pumping System
APC (Accurate Pumping Control)
CPC (Condition-adaptive Pumping Control)
MPC (Multi-mode Pumping Control)
ECO (Eco. Pumping)
Synchronized dual-concrete piston retraction

Hopper
Streamline hopper
Compressed air for oil sprayer
Aluminium alloy hopper cover
Bar-type grille
Hopper vibrator
Cleaning ball stopper
Chrome-plated concrete cylinder
Wear-resistant S pipe
Carbide wear plate
Labour-saving device for hopper cover
Quick-release concrete piston
Automatic forward/reverse agitator rotation
S-valve swinging speed control

Cleaning
Water tank, 700L
Water pump, 70L/min, 13bar
Water pump, 15L/min, 150bar
Hose reel for high pressure water pump, 20m
Quick-connect water inlet

Support
SSM (Standard Support Mode)(Full Support/OSS/FS/LF/RF)
iSM (intelligent Support Mode)
(PAW (Placing Area Warning)+GSW (Ground Support Warning)

Placing Boom
OBF (One-joystick Boom Fold/Unfold)
OBP (One-joystick Boom Place)
ARC (Active Boom Rotation Control)
iMMC (intelligent Multi-arm Motion Control)
Skeleton slewing table for easy maintenance

Delivery Line
Snap pipe coupling
End hose, 3m, DN 125
Double-layer pipes

Lighting
Boom tip light, LED
Boom light, LED
Hopper light, LED
Rear hopper light, LED
Baseframe access light, LED
Support area spotlight, LED
Support indicator light, LED
Tipping warning light, LED
Pumping warning light, LED
Slewing warning light, LED
Stop light, LED
Height-marker lamp, LED
Side-marker lamp, LED

Safety
360° surround camera system
OGS (Outriggers Guidance System)
LBS (Lock Boom System)
PAW (Placing Area Warning)+GSW (Ground Support Warning)
Emergency pumping reverse
Emergency hydraulic power interface for boom and outrigger
End hose squeeze valve, operable by remote control
Hand rail

Digital Management
ZOOMLINK APP

Operation and Maintenance
Spacious platform for service access
Hose rack on outrigger
Diesel tank in rear outrigger
Central grease lubrication system
Mushroom button for horn
Dual radio remote controls
Remote engine off
Remote engine start
OTA (Over-the-Air Update)
Self-diagnosis and monitoring

ZOOMLION Heavy Industry Science & Technology Co.,Ltd.
Zoomlion Smart City Headquarters Building, No.613 Naqiu Road, Wangcheng District, Changsha, Hunan, China

Copyright © ZOOMLION 2024. All rights reserved. No part of the materials provided may be reproduced or copied in any form, or used for any purpose without prior permission from ZOOMLION.